Section 7.
Fitting Instructions

7.1 Grandee Combi Wall Models -Balanced Flue
7.2 Grandee Combi Wall Models -Conventional Flue
7.3 Grandee Combi Floor Standing -Balanced Flue
7.4 Grandee Combi Floor Standing -Conventional Flue

7.1 Grandee Combi Wall Models Balanced Flue

There are two methods of installing Grandee Wall Combis

1). **The Faster Simpler Method** - suitable for two man installation. (Boiler is lifted wholesale onto backplate and not recommended for single operative installation. Note Health and Safety requirements when lifting heavy weights).

2). **A Method of Weight Reduction** which requires dismantling the appliance into sub assemblies to lighten the weight. (Recommended where weight needs to be reduced, i.e. single fitter installation).

Method 1 - The Faster Simpler Method (2 man job)

Step 1.
Remove complete boiler assembly, i.e., heat-exchanger, combi-kit and burner from the backplate by releasing the two fasteners at the top of the appliance and lifting clear of the small shelf located by two pins.

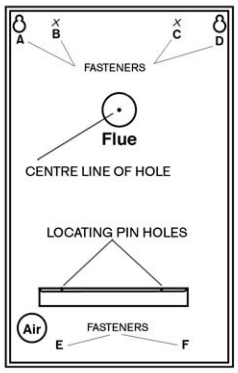

Step 2.
Fix backplate to chosen position using secure fasteners suitable for adequate support utilising fixing points on backplate. When fixed, drill flue and air inlet holes.
Suggest 2.5" (6.3mm) for Grandee 1S and 2S - actual size 2" (5mm).
Suggest 3" (7.6mm) for Grandee 3S - actual size 2.5"(6.3mm).
Alternatively:
You may use the backplate as a template, mark the flue and air intake holes and drill before fixing the backplate.

Step 3.
With at least two fitters carefully grab the heat-exchanger/boiler assembly and lift back onto small shelf with locating pins falling into corresponding holes in the shelf. Re-tighten fasteners at the top.

Now go to Step 13, to fit flue.

Method 2 - The dismantling method to reduce weight.

Step 1.
Remove casing. See Fig 10 on Page 24

Step 2.
Uncouple Combi-Kit. See Fig 31.

Step 3.
Uncouple Burner. See Fig 32.

Step 4.

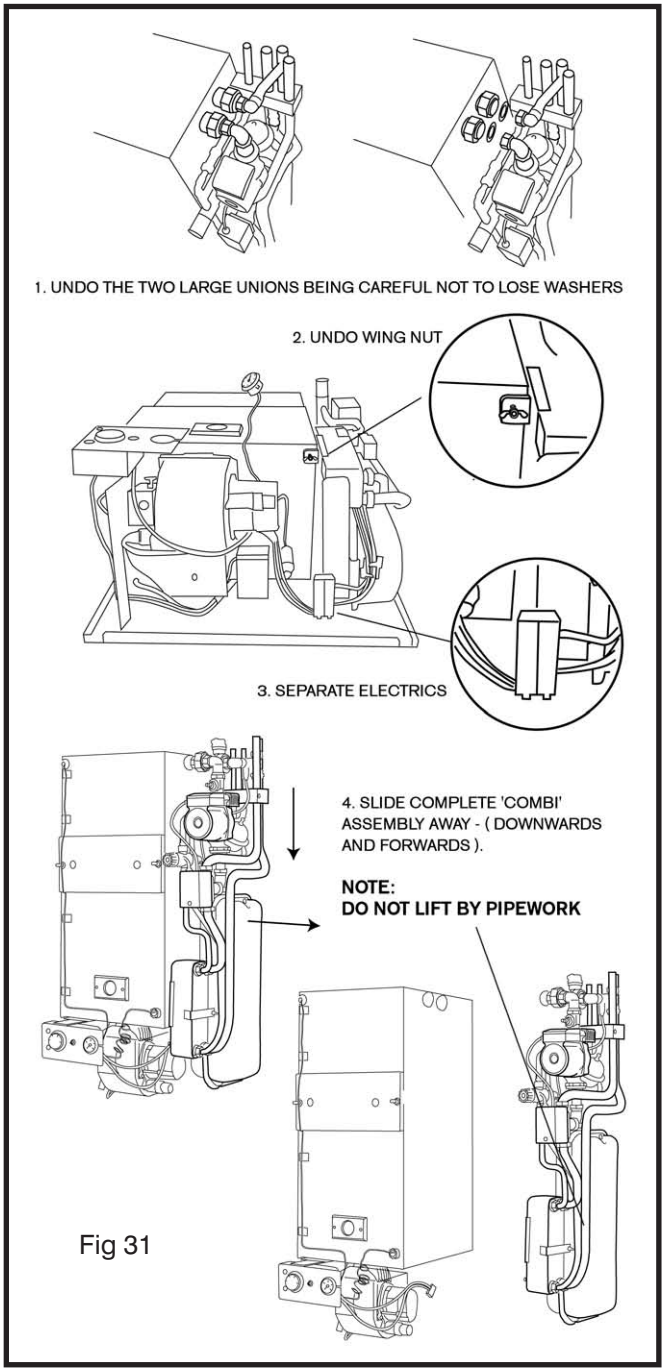

Fig 31

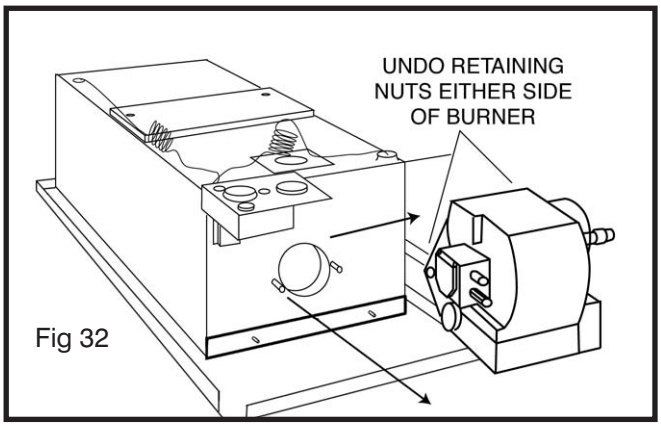

Fig 32

Slide out Control Panel and carefully slide out thermostats. High Limit Stat - top left. Control Stat - bottom right. Release pressure guage. See Fig 33.

Step 5.
Remove heat exchanger unit from the backplate by releasing the two fasteners at the top of the appliance and lifting clear of the small shelf located by two pins.

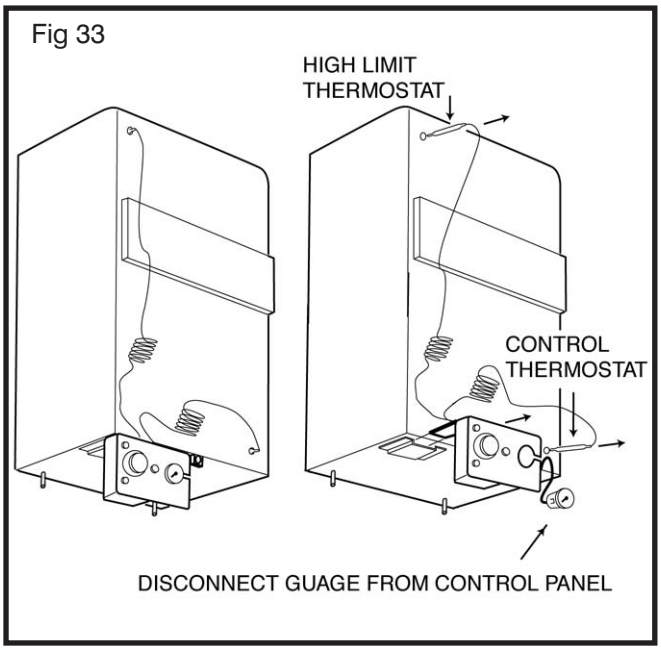

Fig 33

Step 6:
Fix backplate to chosen position using secure fasteners suitable for adequate support utilising fixing points on backplate. When fixed, drill flue and air inlet holes.
Suggest 2.5" (6.3mm) for Grandee 1S and 2S - actual size 2" (5mm).
Suggest 3" (7.6mm) for Grandee 3S - actual size 2.5"(6.3mm).
Alternatively:
You may use the backplate as a template, mark the flue and air intake holes and drill before fixing the backplate.

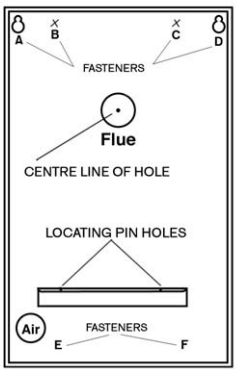

Step 7.

Carefully lift the heat-exchanger back onto small shelf with locating pins falling into corresponding holes in the shelf. Re-tighten fasteners at the top.

Step 8:
Refit Burner - reverse Step 3 above.

Step 9:
Refit Combi-Kit - Reverse Step 2 above.

Step 10:
Couple the electrical terminals making sure they are pushed home completely to ensure proper connection.

Step 11:
Slide in control panel and replace thermostats making sure they are in correct phial pockets;
High Limit Stat - top left of heat-exchanger.
Control Stat - bottom right of heat-exchanger, See Fig 33.
Refit pressure guage into control panel.

Step 12:
Set circulating pump to no.3 and read 'commissioning' details.

Step 13: The Balanced Flue
Remove inspection door and **top baffle only** taking careful note of its proper position and direction.
See Fig 34.

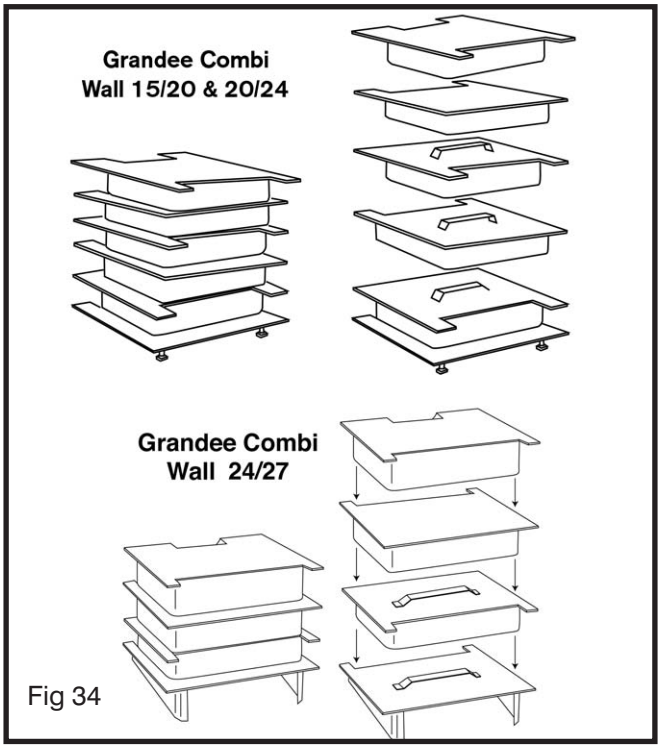

Fig 34

Step 14:
Fit flue as illustrated in figures 35 and 36.

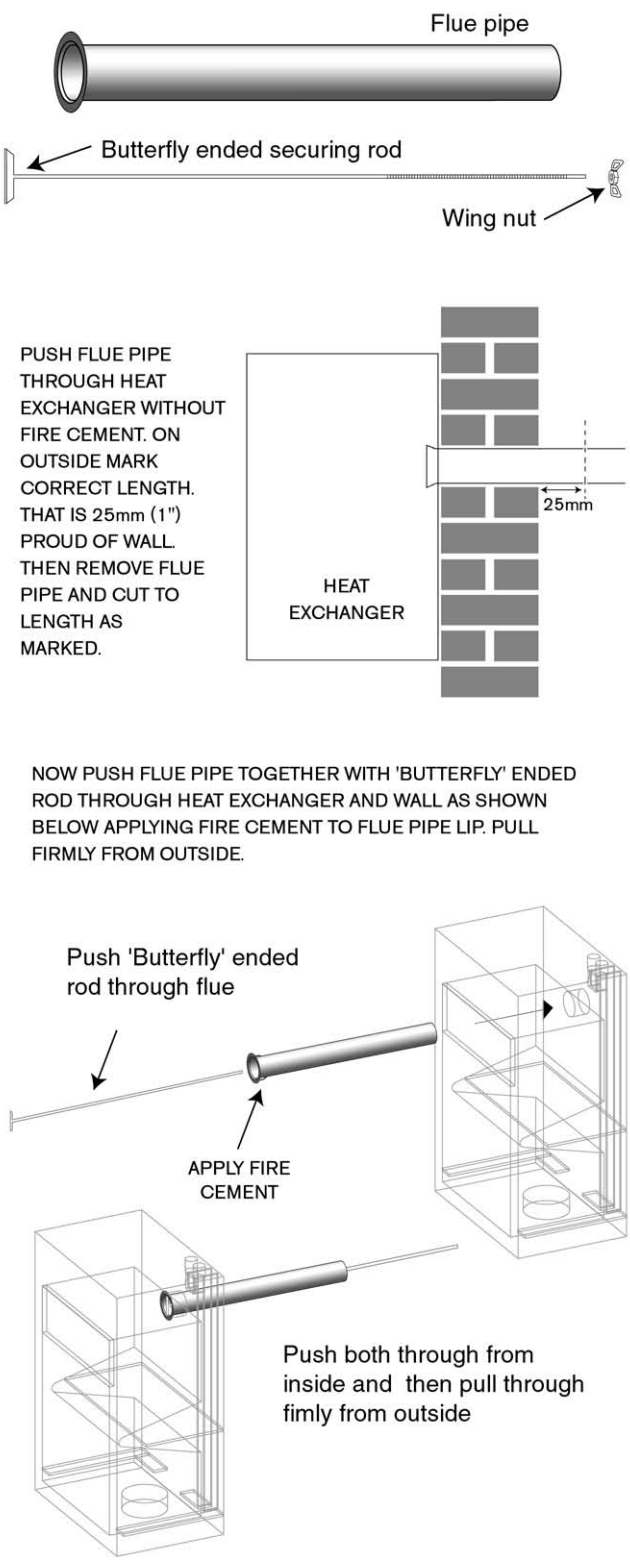

Fig 35

Fig 36
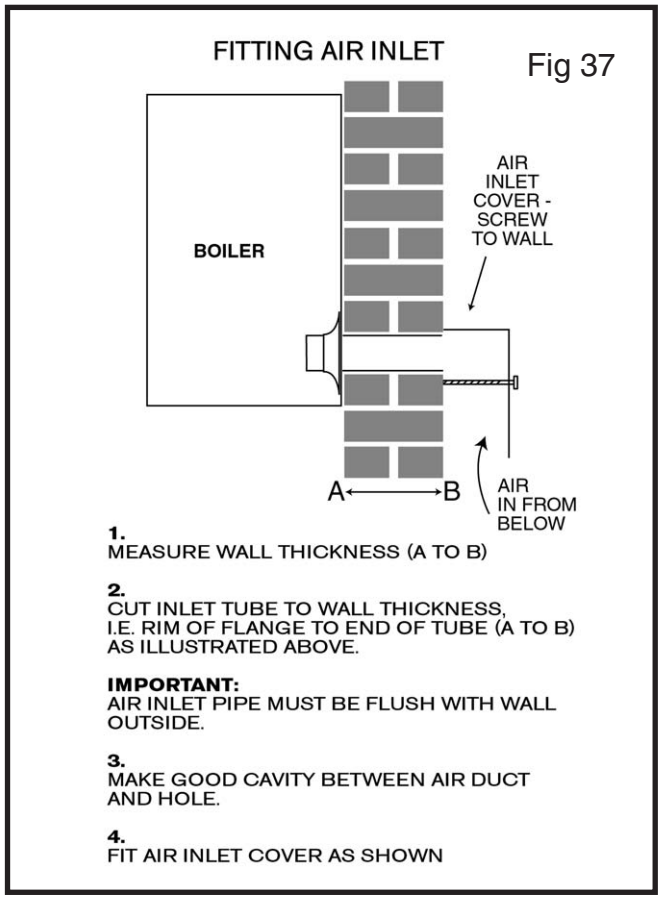
Step 15:
Fit air inlet as illustrated in figure 37.