Secura 4200 Boiler exploded view

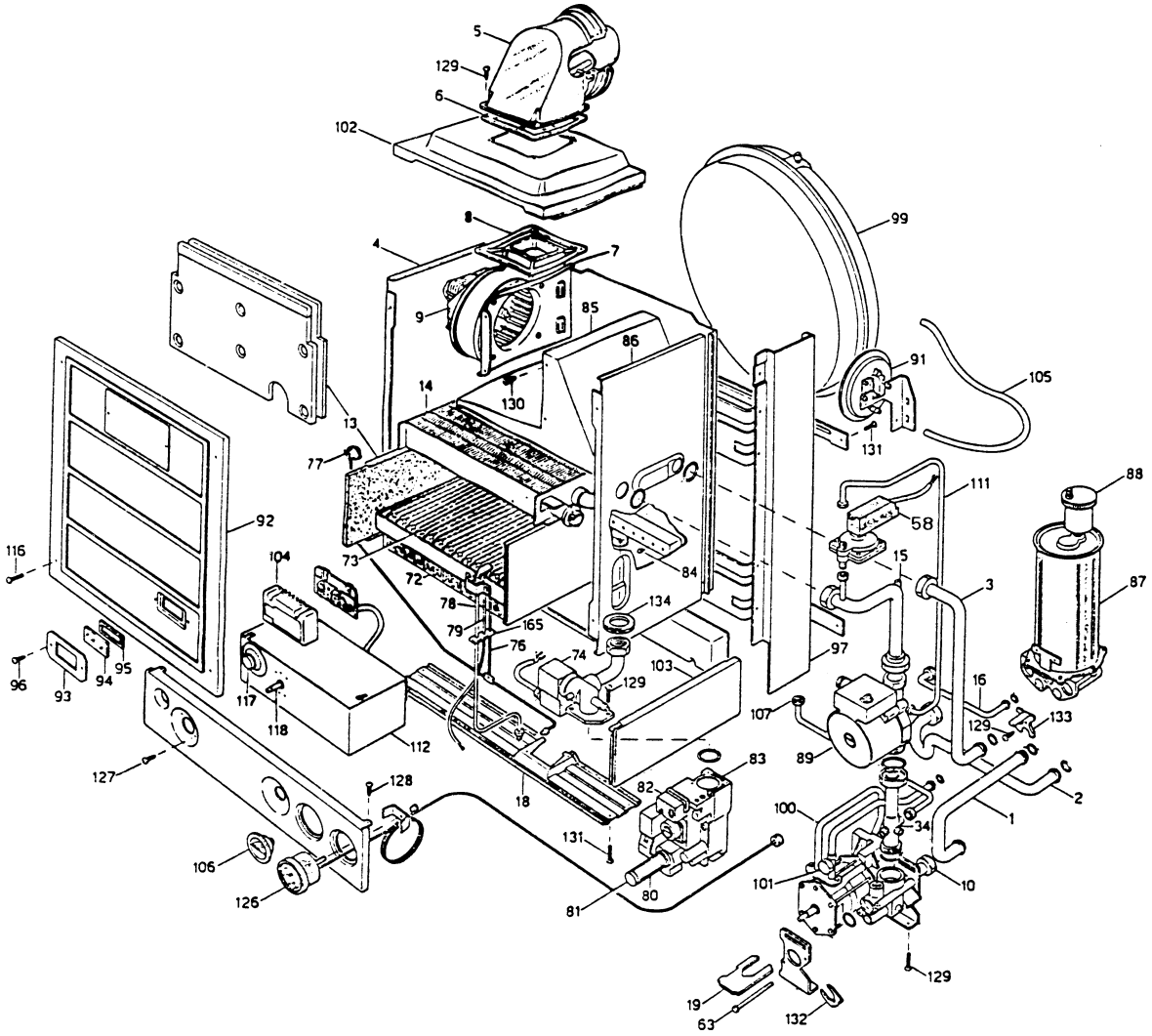
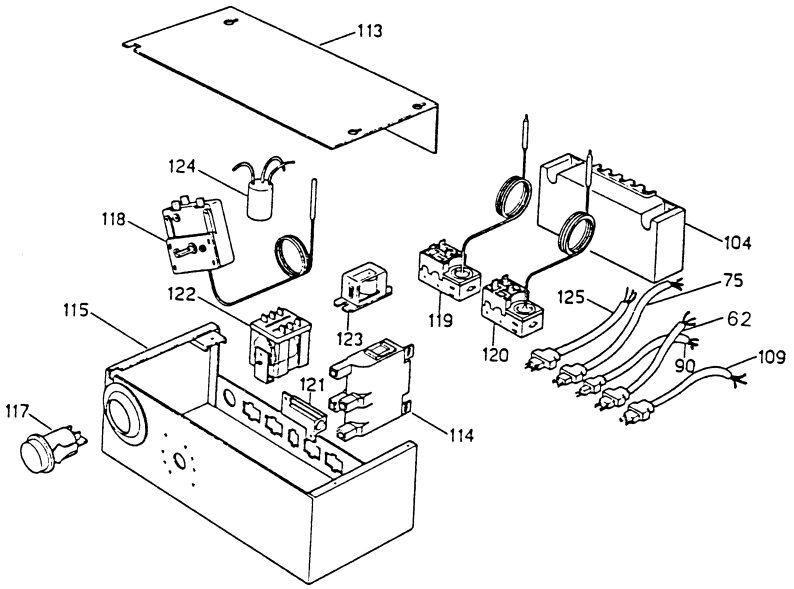
Control box