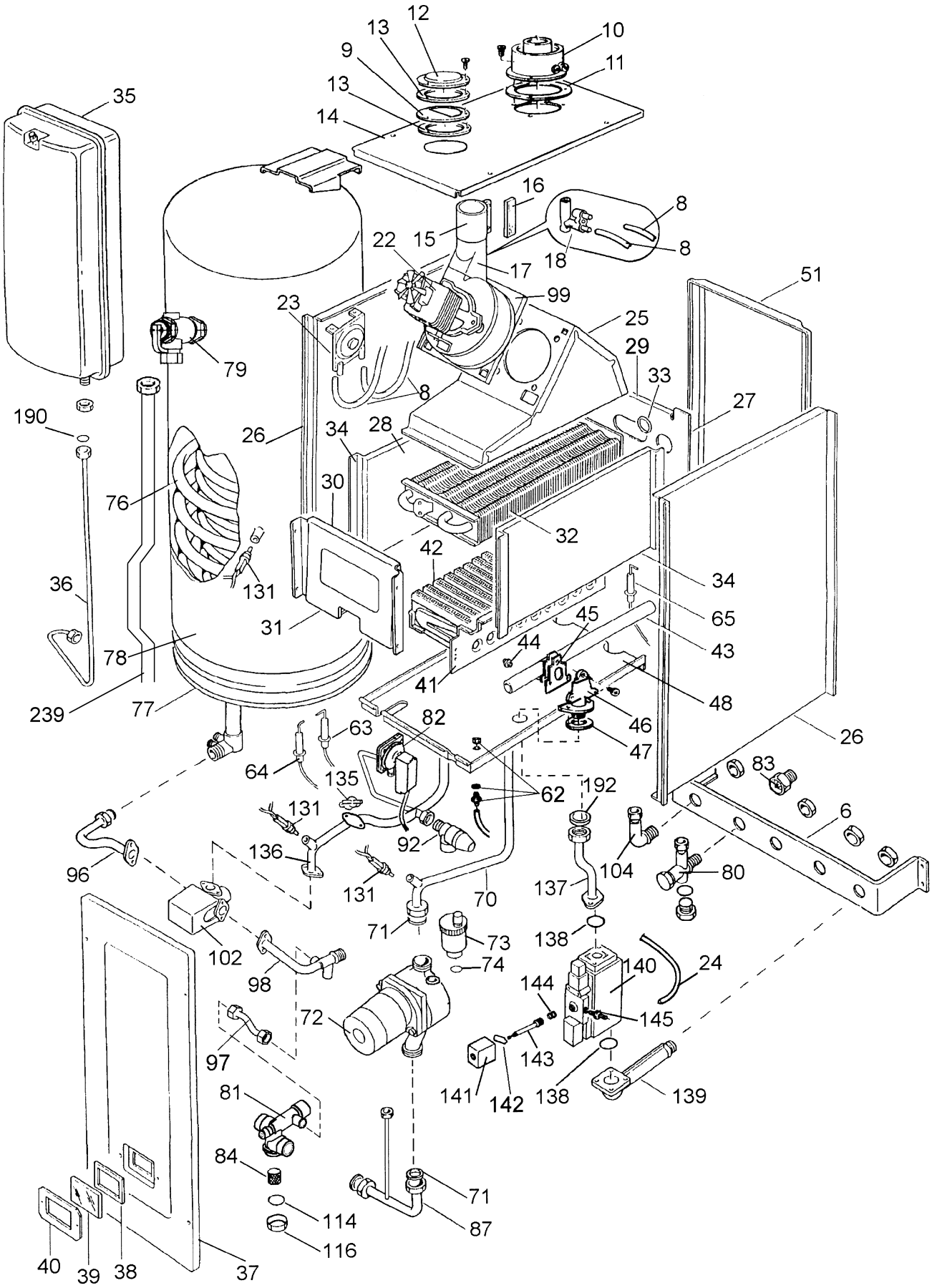500E - Boiler exploded view